INSTALLATION AND MAINTENANCE MANUAL FOR

GROUND MONITOR GM-250

MANUAL PART NUMBER 180-0036 ORIGINAL: 1-17-83 REVISION: B (8-26-86)

NOT TO BE CHANGED WITHOUT MSHA APPROVAL

ADDENDUM

GM-250 Installation and Maintenance Manual

(part # 180-0036)

Use of Multi-Tap Terminating Inductor

(part # 270-0090)

The multi-tap terminator is designed to provide a means to field compensate for the inherent inductance found in all trailing cables. The inductance value of trailing cable increases as the cable length increases. Therefore, it may be necessary to lower the terminator's inductance to compensate for added cable length. To do so, connect the trailing cable's pilot wire to a lower "Turns Tap" found on the inductor.

Always connect to the tap that results in the maximum amount of monitor signal as indicated on the GM-250's signal strength meter or by using an AMR Clamp-On Current meter – model CM-210.

NOTE: All unused taps must be individually isolated and left open circuited.

TABLE OF CONTENTS SECTION TITLE PAGE

1. INTRODUCTION

The AMR GM-250 High Voltage Ground Monitor is a solid state frequency-controlled system, designed to monitor the continuity of an AC frame ground conductor on three phase equipment having phase voltages greater than 1000 VAC. It can be used on either surface or underground equipment, as a pilotwire or pilot-wireless monitor.

The GM-250 is compact and reliable. Most servicing can be done quickly by removing the plug-in cards and relay from the front. As a continuity monitor, it is less subject to nuisance tripping, due to stray AC and DC currents, small impedance changes in the cable or earth, and so on. It has been tested to rigorous standards established by the Mine Safety and Health Administration.

2. **CIRCUIT DESCRIPTION**

When used with Pilot wires, the GM-250 uses the same basic approach found in the pilotwire applications of the GM-150 and GM-200 Monitors. (See Figure 1). A relatively low-frequency signal is generated by the monitor's transmitter. it is coupled through an inductor-capacitor pair to the cable's pilotwire. The signal is then coupled to the frame of the monitored piece of equipment through a second inductor. The two inductors and capacitor form a resonant circuit at the monitor's frequency. If the pilotwire is shorted to the ground conductor, the inductor in the monitored piece of equipment is shorted out. This detunes the filter sufficiently to trip the monitor.

The GM-250 can be used as a pilot-wireless ground monitor in much the same way as low voltage monitors. A simplified diagram is shown in Figure 2. The I KHz signal is coupled to the phase conductors at the distribution point with a phase filter, where it is carried to the monitored machine. A second filter in the machine gives the signal a path to the machine frame, from which it travels back down the ground wire to the monitor.

Signal current in the grounding conductor passes through the receiver CT. The output of the CT is processed by the GM-250's receiver, which filters and amplifies the signal. The receiver then checks the signal for acceptable amplitude and frequency. If the signal level is too low, indicating excessive resistance in the monitoring loop, or if the frequency is outside tolerance, the monitor will indicate a fault condition and open its control relay.

FIGURE 1 BLOCK DIAGRAM, GM-250
PILOT-WIRE APPLICATIONS

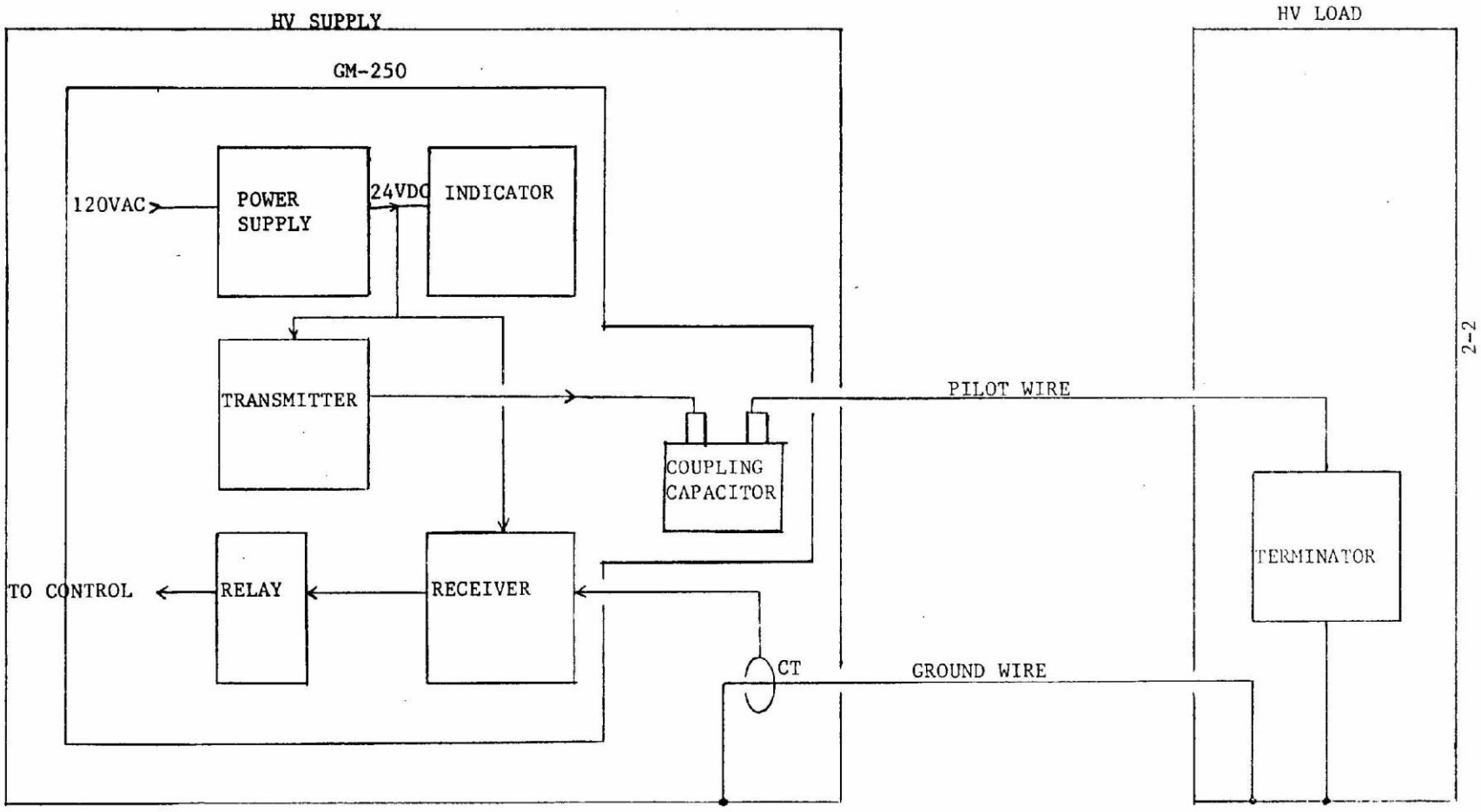

FIGURE 2

BLOCK DIAGRAM, GM-250
PILOT-WIRELESS APPLICATION

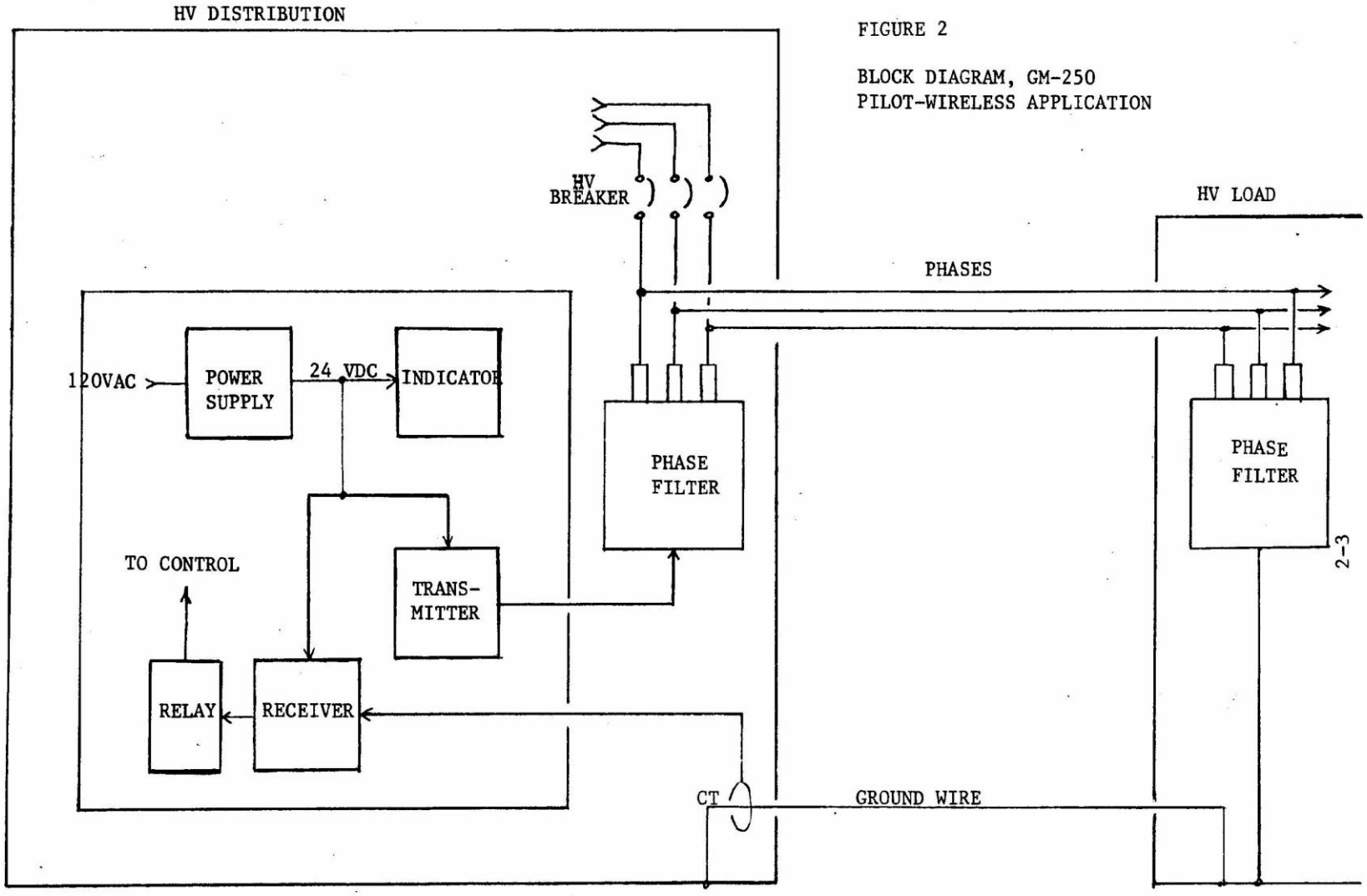

SPECIFICATIONS

A. Electrical

1. Input Power: 120 VAC, +10%, -30% at 0.25 A.
2. Transmitter Output: 14 VAC (measured between the coupling capacitor and the external inductor) at 200mA (0 ohm circuit).
3. Transmitter Frequency: 1000 hz +1% -1%
4. Control Relay Contacts: SPDT, rated 120VAC at 10 A. or 240VAC at 5 A. resistive load.
5. Indicators: "Power ON," "Trip Flag" and "Transmitter ON" lights; “Flag Reset” and "Test" pushbuttons

B. Environmental

1. Operating Temperature: -20 degrees to +70 degrees C. (-4 degrees +158 degrees F.)
2. Humidity: 0 to 90 percent R.H.

C. Mechanical

1. Size: 6" X 7-3/4" panel, 8-1/2" deep. (15.25cm X 19.7cm 21.6cm deep).
2. Weight: 11-1/4 lb. (5.1 kg.).

4. INSTALLATION AND CHECKOUT PROCEDURE – GM-250

4.A. General Installation Instructions

1. All installation wiring shall be performed according to applicable codes.

2. All hookup wiring shall be at least 18 AWG. with THHN or equivalent insulation. Heavier gauge wire may be preferred for mechanical strength.

3. All terminations and connections shall be made using termination and splice connectors.

4. The MAIN AC power shall be off while this equipment is being installed.

4.B. Installation on High Voltage Pilotwire Systems

The installation of the AMR GM-250 Ground Monitor System pilotwire systems consists of wiring and mounting the following components:

1. Main enclosure.
2. Receiver current transformer (CT).
3. Pilot wire filter.
4. Terminating inductor.
5. Parallel path blocking inductor (if needed).

4.B.1 Installation of Main Enclosure

The first step of the installation is to determine the mounting location of the GM-250 main enclosure. The unit can be mounted from the rear of the panel. (See cutout Dimensions in Figure 3) or from the front using the side Flanges.

If the unit is to be mounted behind the panel, remove the front cover from the monitor chassis by removing the two cover mounting screws in the top and bottom of the cover. The cover assembly can be unplugged from the main circuit board. When the cover is removed, four 8/32 machine screws will be visible. Remove these screws, place the main enclosure against the rear of the panel, and replace the four mounting screws. When the main enclosure is securely mounted, plug the cover assembly back into the main circuit board and reattach the cover.

FIGURE 3 CUTOUT DIMENSIONS, GM-250

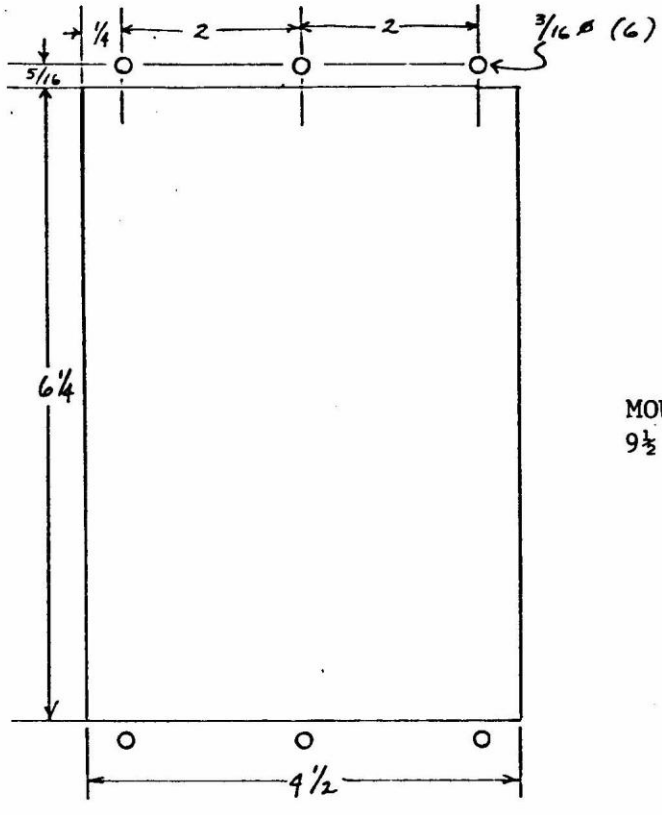

MOUNT BEHIND PANEL
9½ PROJECTION BEHIND PANEL

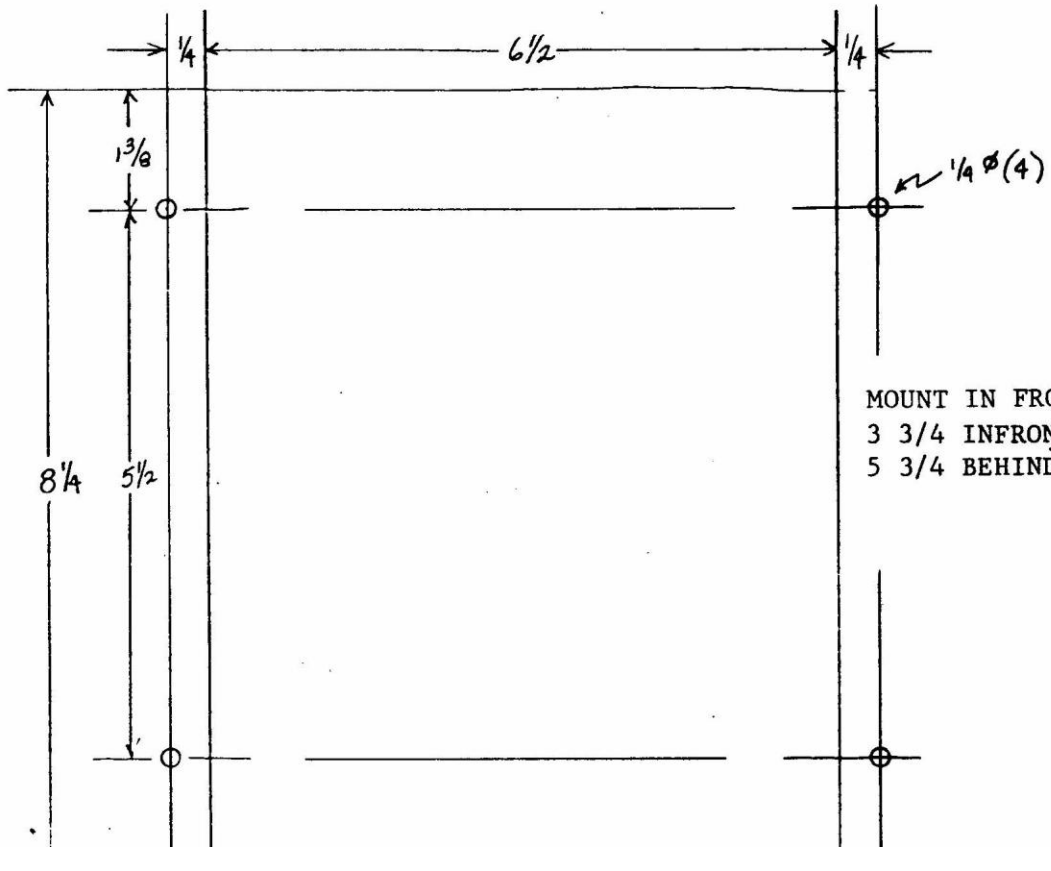

MOUNT IN FRONT
3 3/4 INFRONT OF PANEL
5 3/4 BEHIND PANEL

If the unit is to be mounted from the front of the panel, slide the main enclosure into the cutout, insert the four mounting screws into the holes in the flanges, attach lock washers and nuts to the screws from the rear of the panel and tighten.

For pilotwire installation, the wiring connections for the GM-250 are made to the terminal strip at the rear of the unit as shown in figure 4 as follows:

1. 120VAC: These two terminals are connected to a constant source of 120VAC (+10%, -30%).
2. Interlock: In some applications, it may be desirable to trip the monitor instantaneously. These terminals are normally shorted together. Opening this connection causes the monitor's relay to drop out immediately. It is essential that neither terminal be connected to frame ground. In the GM-250, frame ground and circuit ground are isolated from each other.
3. CT input: the two leads of the receiver CT are connected to these terminals. There is no polarity to these connections.
4. Relay: (C, NO, NC) These are the three connections to the monitor's relay. The normally open (NO) and normally closed (NC) are shown with the relay de-energized. For a maintained current trip mechanism, the common (C) and normally open (NO) should be used. For a shunt or momentary current trip mechanism, the common (C) and normally closed (NC) are used.
5. Trans Out: This terminal connects to the red wire of the pilot wire filter. The green wire of the filter connects to the pilot pin of the high voltage receptacle.
6. Trans Ground: This terminal connects to the ground return point of the monitored cable. Depending on the specific installation, this may or may not be frame ground.
7. Frame Ground: To insure positive frame grounding of the enclosure for safety, connect this point to the local frame.

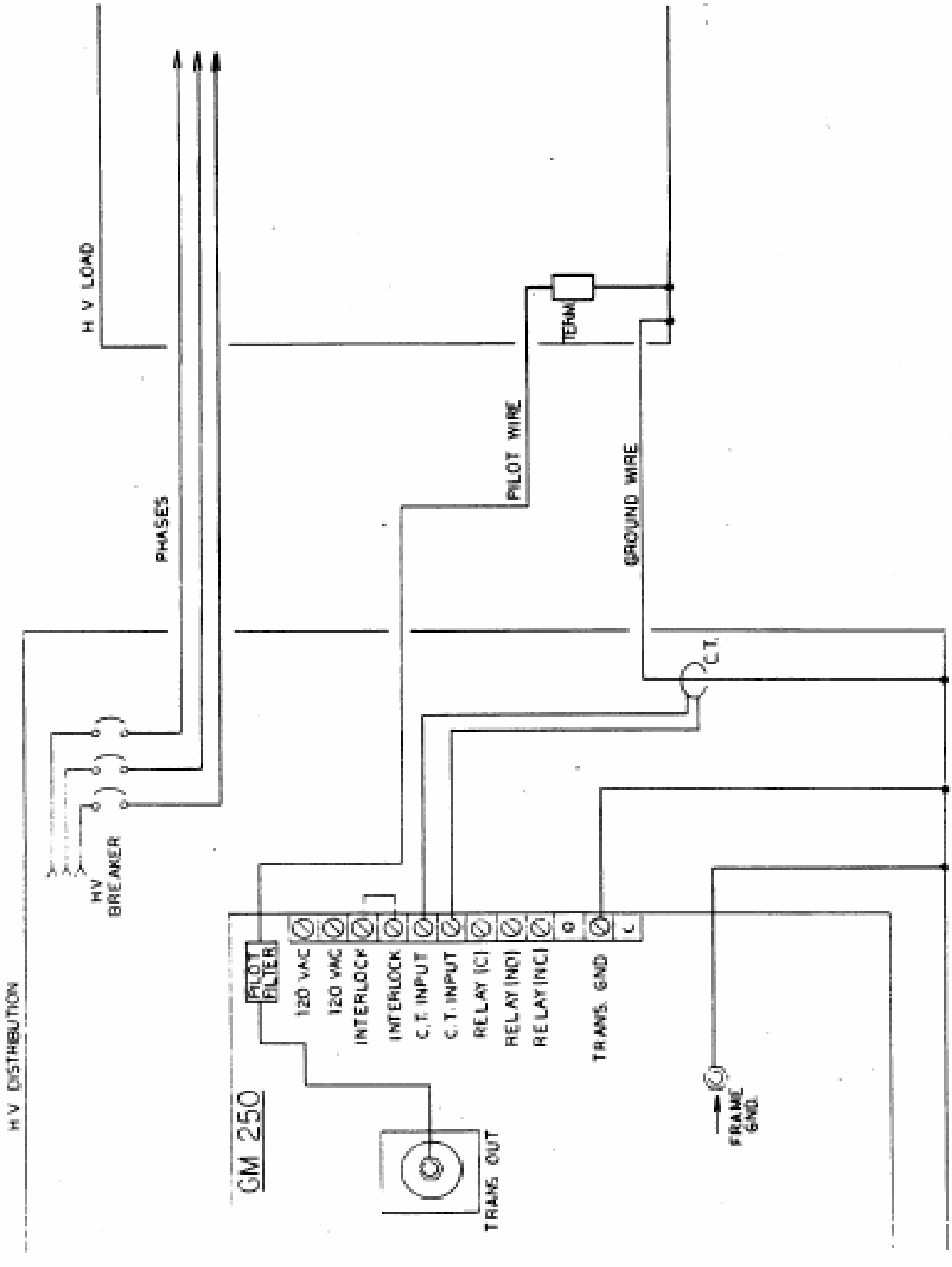

FIGURE 4
Pilot Wire Installation

4.B.2 Installation of the Receiver CT

The ground return wire should be unbolted from the frame or neutral grounding resistor point as necessary. Slide it through the CT and reconnect the ground wire.

NOTE: It is necessary to keep the ground wire from contacting the frame in any way before it passes through the receiver CT. If the receptacle shell is internally connected to the ground pin, the connection must be removed or the receptacle isolated from the frame with an insulator. If the plug shell is internally connected to the ground pin, this connection must be removed and an external ground strap used to ground the plug shell.

4.B.3 Installation of the Terminator

The terminator is installed between the pilot wire and frame ground at the load end of the monitored cable.

4.B.4 Installation of the Blocking Inductor

In some installations (See 4.B.2 NOTE), a parallel path blocking inductor may be needed. Figure 5 shows the proper method of installation for this inductor. Note that the Trans. Ground connection is tied to the top of the inductor and not to frame ground.

4.C Installation of a High Voltage Pilotwireless System

The installation instructions given in Sections 4.B.1 (Main Enclosure), 4.B.2 (Receiver Current Transformer), and 4.B.4 (Parallel Path Blocking Inductor) should also be followed for Pilotwireless installations. In addition, the high voltage phase filters must be mounted in both the distribution enclosure and the machine. This is detailed in section 4.C.1.

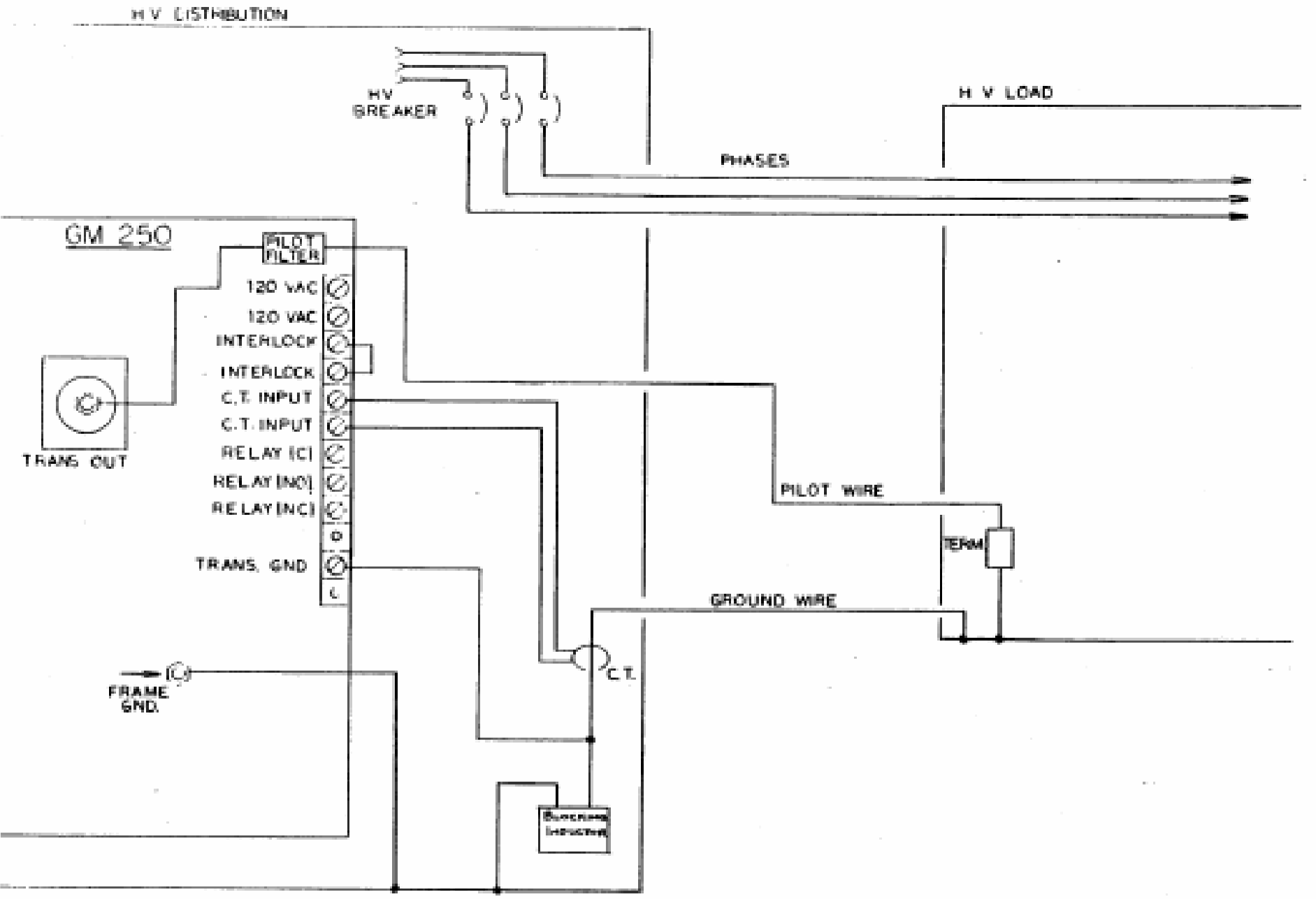
H V DISTRIBUTION
HV BREAKER
H V LOAD
PHASES
GM 250
PILOT FILTER
120 VAC
120 VAC
INTERLOCK
INTERLOCK
C.T. INPUT
C.T. INPUT
RELAY (C)
RELAY (NO)
RELAY (NC)
TRANS. GND
TRANS OUT
PILOT WIRE
TERM
GROUND WIRE
C.T.
FRAME GND.

4.C.1 Installation of the High Voltage Phase Capacitors

Since the phase terminals of these capacitors are connected to very dangerous potentials, it' is ABSOLUTELY ESSENTIAL that supply power be removed before attempting the installation. After power is removed, short all phases to ground to drain any residual charge on the cable. Full protective gear is recommended until this has been done.

Find a suitable location for the capacitor. The unit should be protected from dripping water or other physical damage. Drill two holes for 3/8" clearance, 1811 apart and securely bolt the capacitor down. A #8 AWG or larger conductor is recommended for phase connection for mechanical strength. Insulate all connections properly.

4.C.2 Installation of the Resonators

Provided with each phase capacitor is the resonator assembly. The resonator's red lead should be connected to the "Trans Out" terminal by a #16 AWG or heavier wire. The green lead will then connect to the case of the phase capacitor. In order to insure a good connection, it is important to clean the paint off of the capacitor case where the connection is to be made. The machine resonator's red lead should be secured to the machine frame. The green lead will connect to the case of the machine's phase capacitor. In both cases, be sure that there is no direct electrical connection from the capacitor case to frame ground, as this will prevent the monitor signal flow. Refer to Figures 6 and 7 for more information.

4.D Installation as a Master/Slave

The GM-250 can be used to drive more than one circuit if desired. A maximum of four circuits can driven from one master unit. Installation is the same as described in the previous sections with the following exceptions: The transmitter board must be removed from all units except one. This one will be designated as the master unit. All red wires of the resonators (wireless systems) or pilot filters (pilot systems) will be connected to the "Trans. Out" of this master unit. Each ground wire being monitored will have its own CT and receiver in the slave units. Refer to Figure 8 for this type installation.

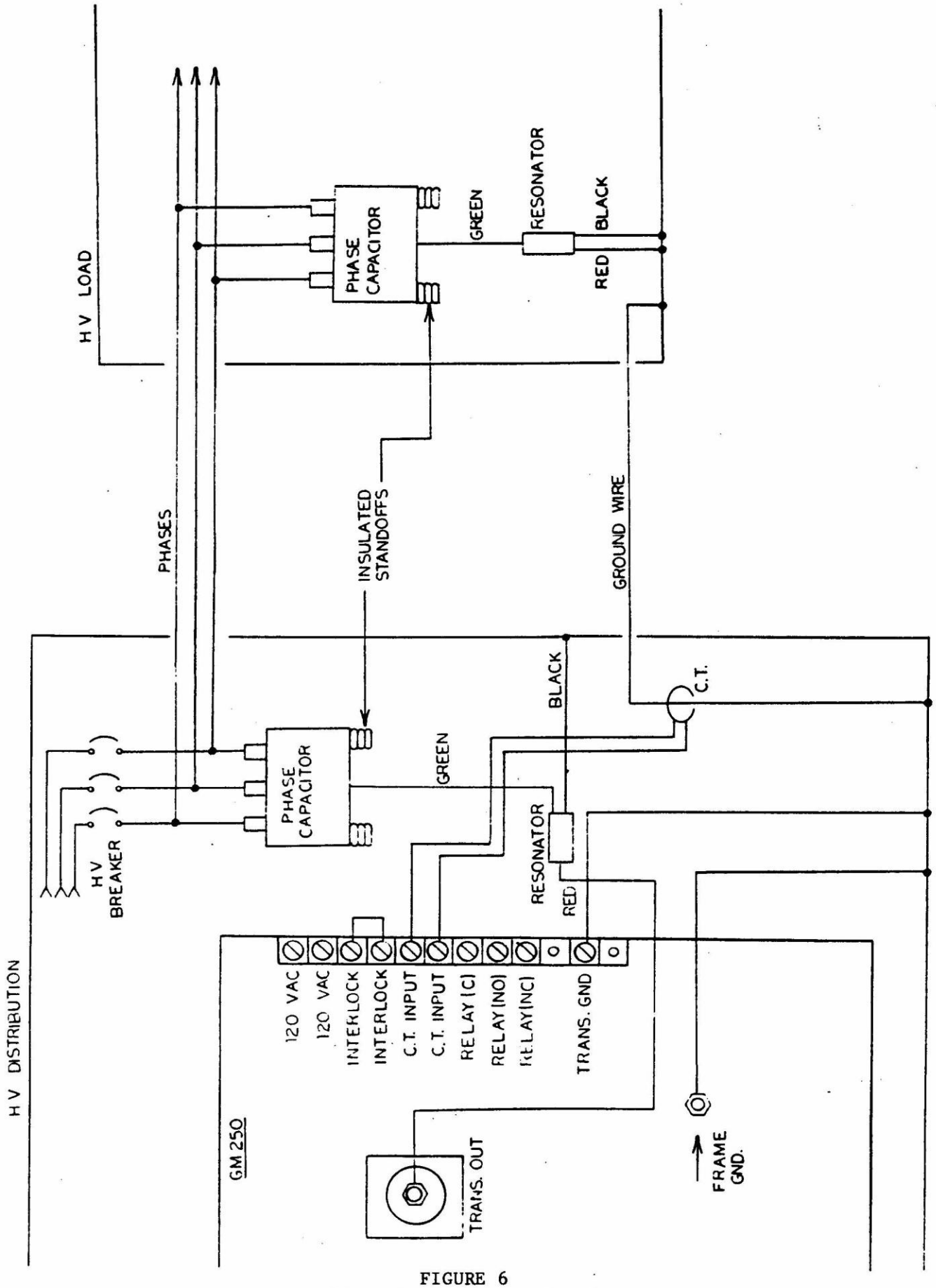

FIGURE 6
Pilot Wireless Installation

FIGURE 7

USE OF BLOCKING INDUCTORS, GM-250
PILOT-WIRELESS APPLICATION

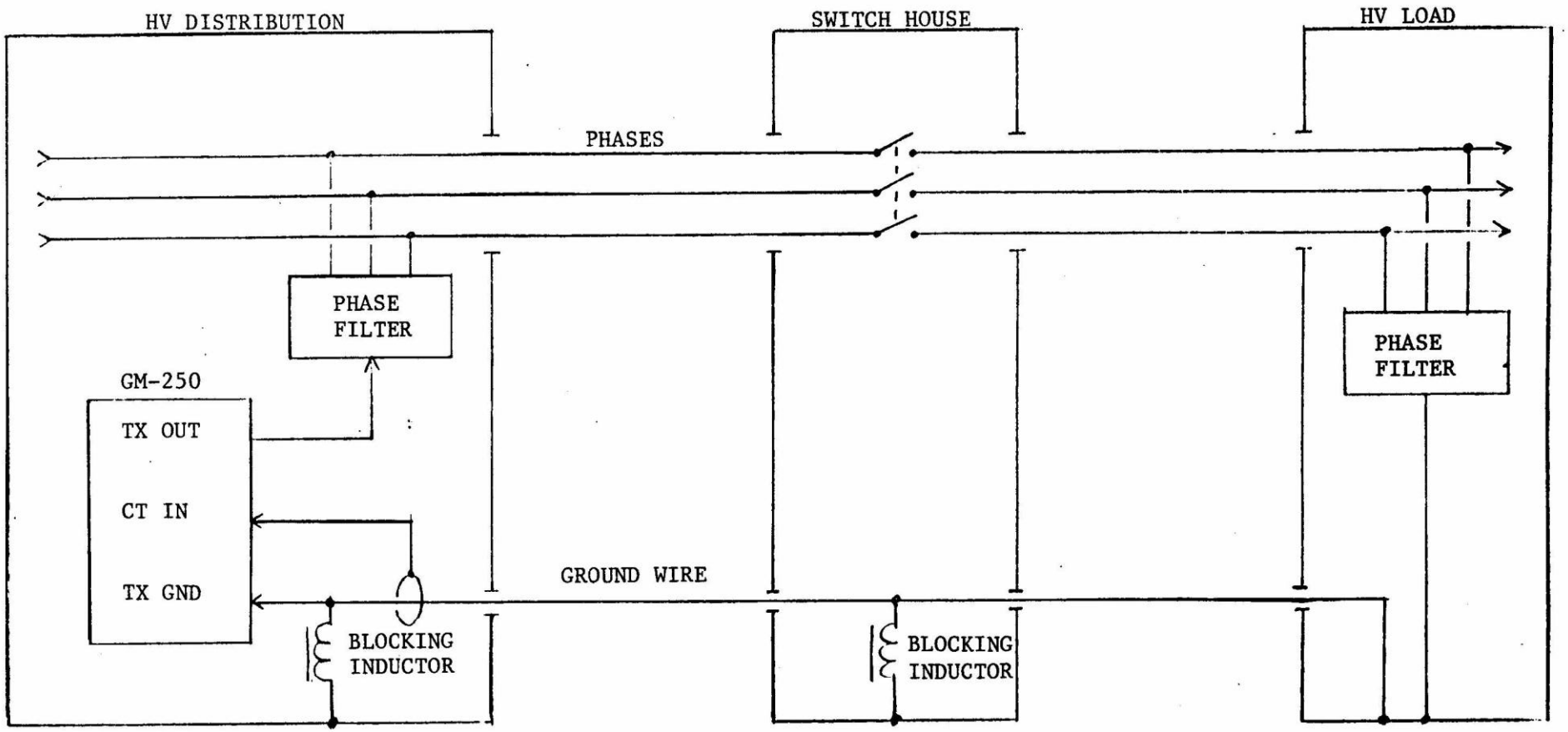

The ground wire is isolated as it passes through the switch house. Blocking inductors are used in this way whenever a parallel earth path exists (whenever the ground wire contacts earth).

FIGURE 8
Master/Slave Installation
(MAX. 4 Circuits)

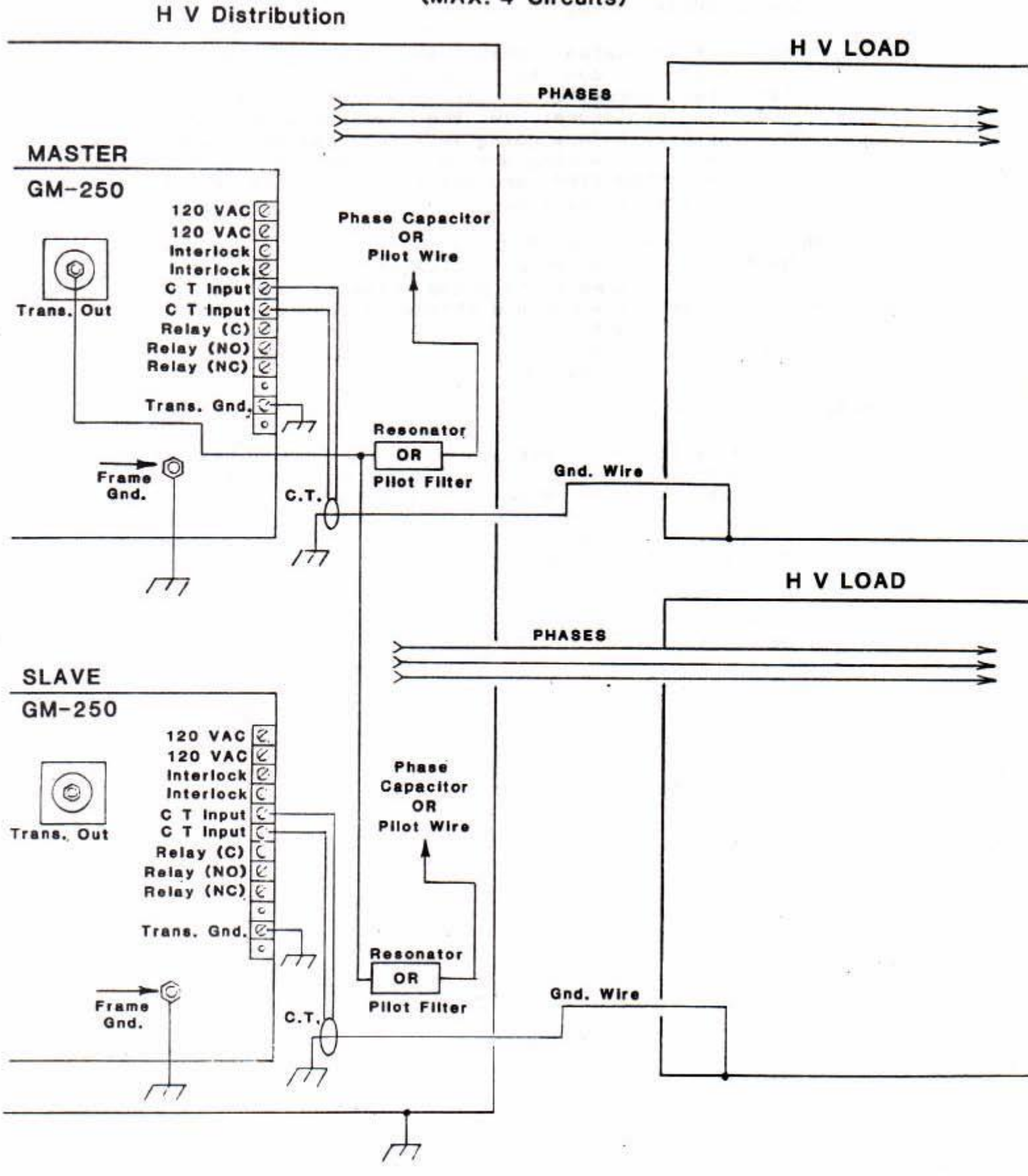

5. SERVICE INSTRUCTIONS

Experience indicates that the most common problems encountered are due to faulty wiring or broken or intermittent connections in the cable (particularly inside the enclosures in the case of stationary cable installation.) Before going into detailed troubleshooting procedures, all wiring should be checked against the electrical schematics and examined to insure electrical and mechanical integrity.

NOTE: To check the GM-250 while installed, extreme care should be taken, as lethal voltages are present. When working in any area where these voltages may be encountered, always lock out and otherwise insure that the only power present is that feeding the monitor. If this is not possible, the unit should only be serviced after removal from the system.

5.A. Transmitter

Use a volt ohmmeter to check the PC voltage between the Trans. Out and Trans Ground terminals. This voltage will read between 1.5 and 2 VAC. If no voltage is read, disconnect the wire from the Trans. Out terminal and check again. If there is still no voltage, remove the front cover (See 4.B.1.) and replace the transmitter card (See Figure 9).

If a frequency counter is available, the frequency can be checked by reading across the Trans. Out and Trans. Ground terminals. This frequency should be 1000 Hz., (+10 Hz. -10 Hz.

Caution: The signal level at this point is relatively high. An unattenuated counter may be damaged.

5.B. Receiver and Relay

In pilot wire systems, the receiver may be tested most easily with a spare terminator. Remove the pilot filter's green wire from the pilot pin of the cable coupler and temporarily connect it to one wire of the terminator. The coupler must then be removed. Run the other terminator wire through the receiver CT and tie it to the Trans Ground terminal. The control relay should close. Pressing the test button should open the relay. You should note that the test button is not a means of determining whether the monitor is properly calibrated. If calibration is suspected to be incorrect, the receiver must be returned to AMR since field calibration is not legal.

To test the receiver of a wireless installation, use a 1 ohm, 1 watt resistor as a load. One side of the resistor should be connected to the Trans.Out terminal. The other side should be run through the CT to the Trans. Ground terminal. The receiver and relay should now operate properly.

If the relay does not pick up when this test is performed, replace the receiver PCB and try again. If the relay is still not picked up, replace the relay. Finally, remove one lead of the CT and measure the CT resistance. A resistance of greater than one ohm indicates a defective CT.

5.C. Power Supply

The power supply can be checked visually by observing the Power light on the front cover. Ordinarily this light should be on at a medium intensity. If there is no light, check the main fuse at the rear of the monitor. Replace it with a 250V, 1/2 A fast blow fuse (3AG type). A very bright or very dim light may indicate a defective supply. This can be checked by removing the front cover and testing the voltage with a VOM (See Figure 9). The voltage should be +24 VDC +1V -1V. If this voltage is abnormal, the monitor must be removed from the panel and the mother board assembly removed for replacement or repair. To replace the mother assembly, remove the GM-250's side cover. Four screws hold the mother plate in place. Unplug the mother and indicator connectors and slide the plate out the side of the enclosure. The mother PCB may be replaced by removing the screws which retain it to the mother plate. Reinstall the assembly in the reverse order as above.

FIGURE 9

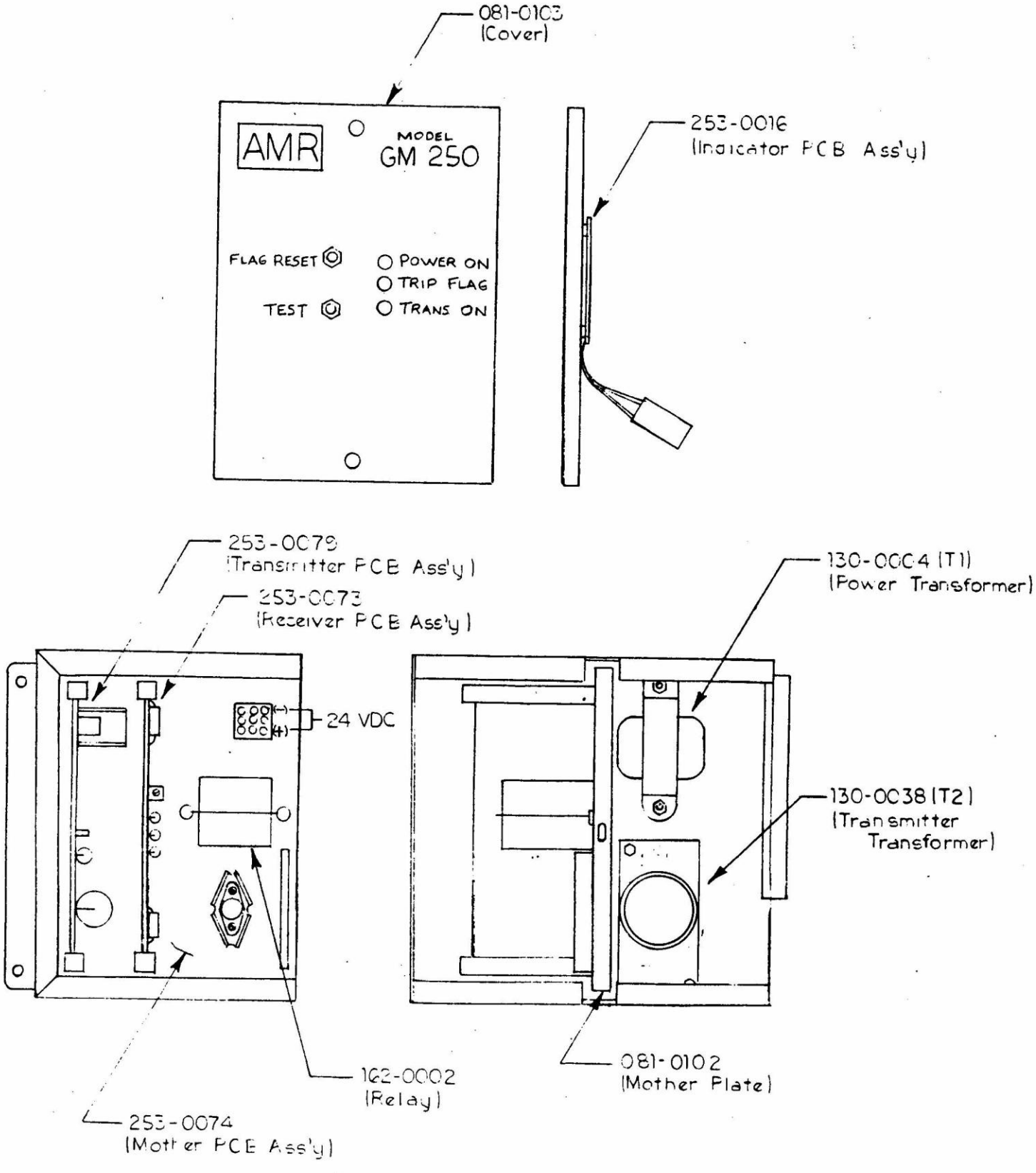
081-0103
(Cover)
AMR
MODEL
GM 250
FLAG RESET
TEST
POWER ON
TRIP FLAG
TRANS ON
253-0016
(Indicator PCB Ass'y)
253-0079
(Transmitter PCB Ass'y)
253-0073
(Receiver PCB Ass'y)
24 VDC
(-)
(+)
130-0004 (T1)
(Power Transformer)
130-0038 (T2)
(Transmitter
Transformer)
162-0002
(Relay)
081-0102
(Mother Plate)
253-0074
(Mother PCB Ass'y)

6. REPAIR PARTS LIST

Main Enclosure Cover	(081-0103)
Power Transformer	(130-0004)
Transmitter Transformer	(130-0038)
Transmitter PCB Assembly	(253-0079)
Receiver PCB Assembly	(253-0073)
Indicator PCB Assembly	(253-0016)
Mother PCB Assembly	(253-0074)
Relay	(162-0003)
Mother Plate	(081-0102)
Receiver CT	(125-0016)
7.2KVPhase Filter (includes resonator)	(270-0033)
Pilot Wire Filter Assembly	(270-0048)
Terminating Inductor Assembly	(270-0090)

WARRANTY

"AMERICAN MINE RESEARCH, INC. warrants that each product manufactured by it is free from defects in material and workmanship under normal usage and service. The obligation under this warranty shall be limited to the repair or exchange of any part or parts demonstrated to be defective; provided, such part or parts is returned to American Mine Research, Inc.'s plant or to an authorized agent of American Mine Research, Inc., within ninety (90) days after delivery of the product to the original purchaser; such return to be made at the sole expense of the original purchaser.

THIS WARRANTY IS EXPRESSLY IN LIEU OF ANY AND ALL OTHER WARRANTIES, INCLUDING THE WARRANTIES OF MERCHANTABILITY AND FITNESS FOR PARTICULAR PURPOSE AND OF ANY AND ALL OTHER OBLIGATIONS OR LIABILITIES ON THE PART OF AMERICAN MINE RESEARCH, INC. AMERICAN MINE RESEARCH, INC. NEITHER ASSUMES NOR AUTHORIZES ANY OTHER PERSON TO ASSUME FOR IT ANY LIABILITY OTHER THAN THIS WARRANTY IN CONNECTION WITH THE SALE OF ITS PRODUCTS OR ANY PART OR PARTS THEREOF.

THIS WARRANTY SHALL NOT APPLY TO ANY PRODUCT OR ANY PART THEREOF WHICH HAS BEEN SUBJECT TO ACCIDENT, NEGLIGENCE, ALTERATION, ABUSE, OR MISUSE, INCLUDING ANY PRODUCT OR ANY PART THEREOF ON WHICH THE SERIAL NUMBER HAS BEEN ALTERED, DEFACED, OR REMOVED.

THIS WARRANTY SHALL FURTHER NOT APPLY TO ANY PRODUCT OR ANY PART THEREOF WHICH AS BEEN CONNECTED, INSTALLED OR ADJUSTED OTHERWISE THAN IN ACCORDANCE WITH AMERICAN MINE RESEARCH, INC.'S INSTRUCTIONS AND/OR SPECIFICATIONS.

American Mine Research, Inc. reserves the right to discontinue any product model at any time or to change specifications or designs at any time without prior notice and without incurring any obligation thereby."